DILLON®

SPECIFICATIONS OVERVIEW

AP Dynamometer

A rugged, mechanical force-measurement instrument designed for accurate tension and load monitoring across demanding industrial applications, offering capacities from 500 lb to 50,000 lb with ±0.5% accuracy and durable construction.



Range
500 lb to 50,000 lb

Size
5" and 10" dial face

Proof Load
Carry case, batteries, manual and calibration card

Overload
500%

Units of Measure
lbf or kgf

Accuracy
+/- 0.5% of instrument capacity

Zero Control
Zero up to 20% capacity

Calibration
Traceable to NIST

Operating Range
-50° F to 140° F

Corrosion Protection
Powder coated pressure bar

Protection
Hard polymer storage case included along with calibration certificate

Recalibration
Every 12 months

Approvals
CE approved / ASME B30.26 up to 20,000lb capacity

The AP Dynamometer is used for such diverse jobs as:

- Aircraft engine removal as part of a boot strap assembly
- Line sagging and erecting
- On-board load testing cranes/davits/lifeboats
- Tensioning of flare stack guy wires
- Safe lifting and tension monitoring
- Erecting and monitoring stage rigging
- Installation and maintenance of overhead high voltage electrical lines (OHEL)
- Installation and tension monitoring of large glass installations, tension wires
- Many other applications: cable pulling, zip wire tensioning, logging, highway recovery vehicles, tug boats

Shipping and Packging (approximate weights):

Model	Net weight	Shipping weight	Shipping box
5" Low and Med Capacities	9 lb	15 lb	16" x 11" x 7"
10" Low and Med Capacities	10 lb	16 lb (26 lb)*	14" x 14" x 7"
30,000 – 50,000 lb (20,000 kg) High Capacity	64 lb	98 lb	37.5" x 13" x 10.5"

**with optional steel case*

CE

Pound Capacities

	5" (125 mm) Dial Size		10" (250 mm) Dial Size		Ultimate Safety Factor	Pressure Bar Material
	Part Number	Cap x Division Size	Part Number	Cap x Division Size		
LOW	30006-0019	500 x 5	N/A			
	30006-0027	1,000 x 10	30007-0026	1,000 x 5	5:1	Alumium
	30006-0035	2,000 x 20	30007-0034	2,000 x 10	5:1	Alumium
	30006-0043	4,000 x 25	N/A		5:1	Steel
	30006-0050	5,000 x 50	30007-0059	5,000 x 20	5:1	Steel
	30006-0076	8,000 x 50	N/A			
	30006-0084	10,000 x 100	30007-0083	10,000 x 50	30006-0019	Steel
MED	30006-0092	15,000 x 100	N/A			Steel
	30006-0100	20,000 x 200	30007-0109	20,000 x 100	5:1	Steel
HIGH	N/A		30784-0017	30,000 x 200	5:1	S
	N/A		30784-0033	50,000 x 200*	3:1	S

**Not CE approved.*
ASME b30.26 compliant on 20,000 lb (10,000 kg) and below.

Kilogram Capacities

	5" (125 mm) Dial Size		10" (250 mm) Dial Size		Ultimate Safety Factor	Pressure Bar Material
	Part Number	Cap x Division Size	Part Number	Cap x Division Size		
LOW	30006-0134	500 x 5	N/A			
	30006-0159	1,000 x 10	30007-0158	1,000 x 5	5:1	Alumium
	30006-0126	2,000 x 20	30007-0125	2,000 x 10	5:1	Alumium
	30006-0167	4,000 x 25	N/A		5:1	Steel
	N/A		30007-0174	5,000 x 20	5:1	Steel
MED	30006-0118	10,000 x 100	30007-0117	10,000 x 50	5:1	Steel
HIGH	N/A		30784-0058	20,000 x 100	4:1	Steel

Low and Medium Capacities

500–20,000 lb / 200–10,000 kg

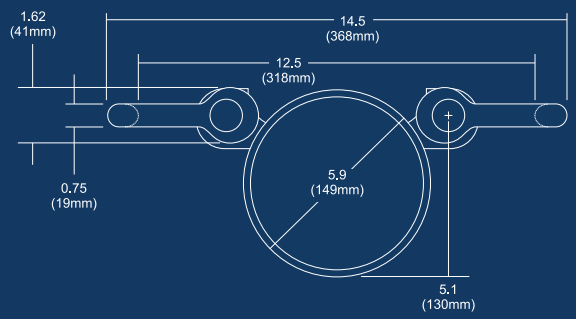

5" Dial Design (Front View)

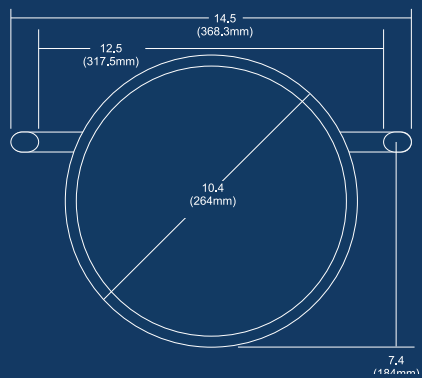

10" Dial Design (Front View)

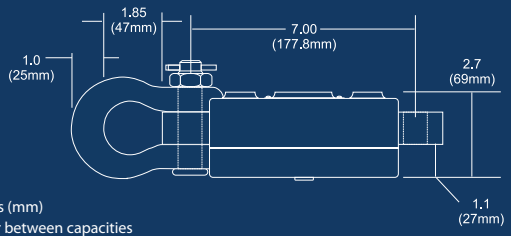

(Side View)

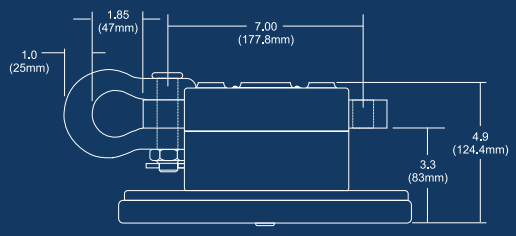

(Side View)

Dimensions in inches (mm)
Drawing scales differ between capacities
Dimensions subject to manufacturer / supplier tolerances and are subject to change without notice.

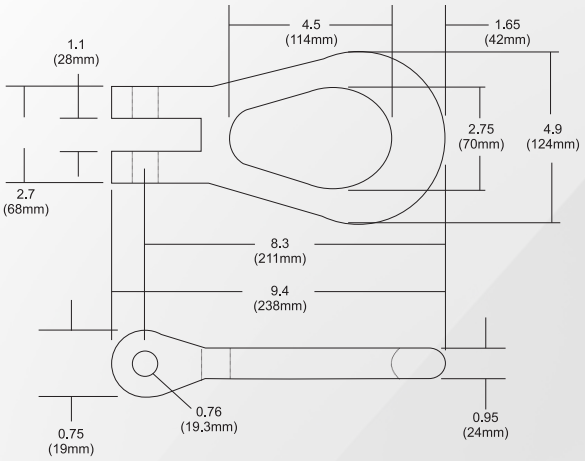

Optional Oversize Shackle

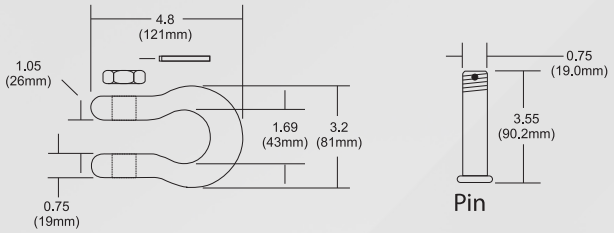

Standard Shackle

High Capacities

30,000 – 50,000 lb / 15,000 – 20,000 kg

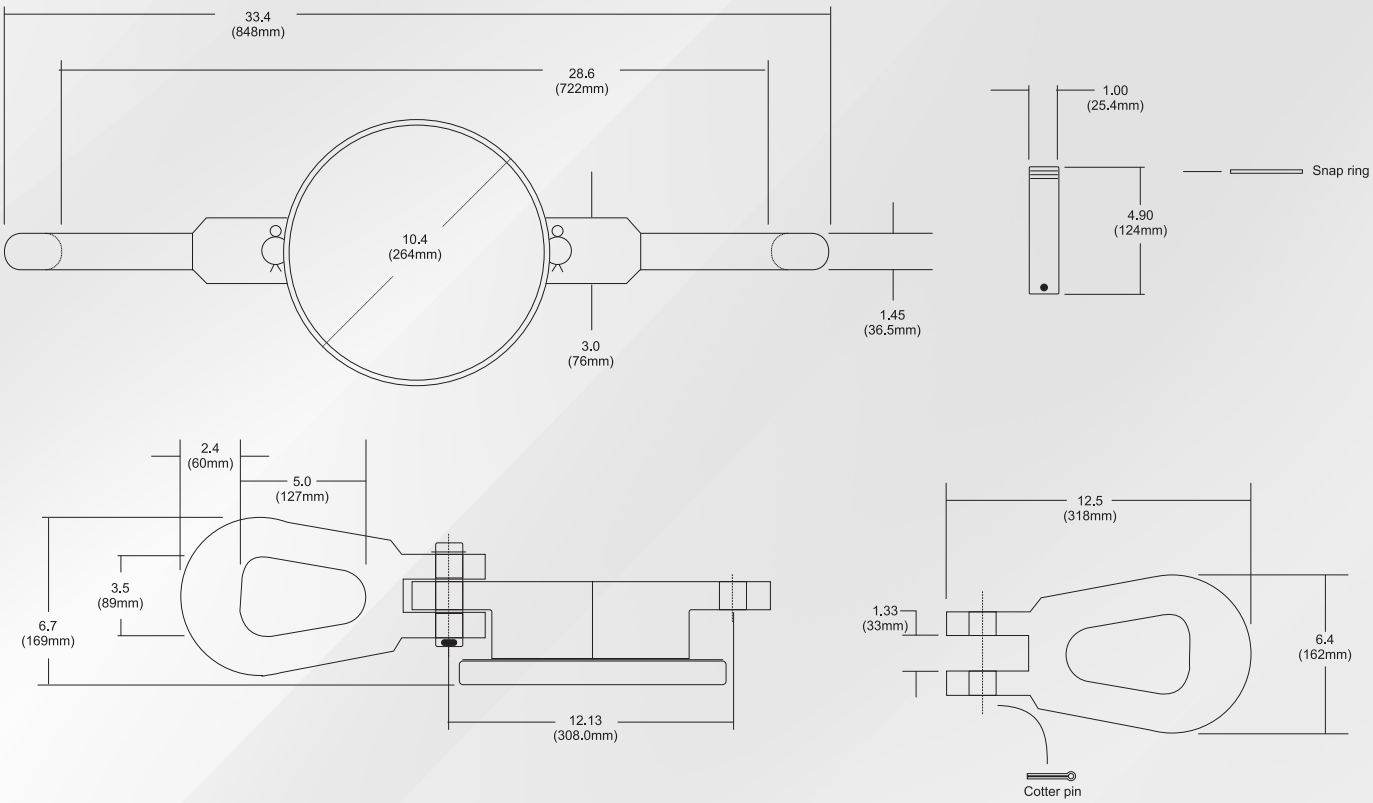

DILLON USA
1000 Armstrong Drive
Fairmont, MN 56031
Toll-Free: (800) 368-2031
Phone: (507) 238-8796
Fax: (507) 238-8258
www.dillonforce.com

DILLON UK
Foundry Lane, Smethwick,
West Midlands B66 2LP
Phone: +44 (0) 845 246 6717
Fax: +44 (0) 845 246 6718
Email: sales@dillon-force.co.uk
www.dillon-force.co.uk

DILLON

Force Measurement Equipment

A division of Avery Weigh-Tronix, LLC

Dillon is part of Avery Weigh-Tronix. Avery Weigh-Tronix is a trademark of the Illinois Tool Works group of companies whose ultimate parent company is Illinois Tool Works Inc ("Illinois Tool Works"). Copyright © 2026 Illinois Tool Works. All rights reserved. This publication is issued to provide outline information only and may not be regarded as a representation relating to the products or services concerned. This publication was correct at the time of going to print, however Avery Weigh-Tronix reserves the right to alter without notice the specification, design, price or conditions of supply of any product or service at any time.

APDyna_spec_09766-0013
V2 09766-0013